Heat recovery from nonferrous smelting furnace to improve boiler efficiency

Energy concept

Installation location: Department ferrous foundry, furnace No.1 of 5000 kg;

Type recovery: Hoval ThermoCondensor AF 1500 "heat recovery unit condensing boiler with fuel oil (sulfur content <50 ppm) / Gas„

Retriever: air (gas burning) / water

Expected economic: about 100 kW due to lower natural gas used in central heating

Short description of the solution:
The aluminum melting furnace No.1 capacity of 5000 kg, which runs on natural gas recovers the combustion gases have about 300 degrees to the basket and a flow rate of 3400 kg / h. The resulting heat is used to heat water circulating through the coil and has the circuit for central heating, boiler that provides heat to the blower working halls.

Central heating boiler is equipped with a hot water
produced by ICI CALDAIE SPA,
Model REX 62
Fuel: gas (natural gas)
Power 620 kw,
Tmax 90 gr,
Phnom / Pmax 2/5 bar

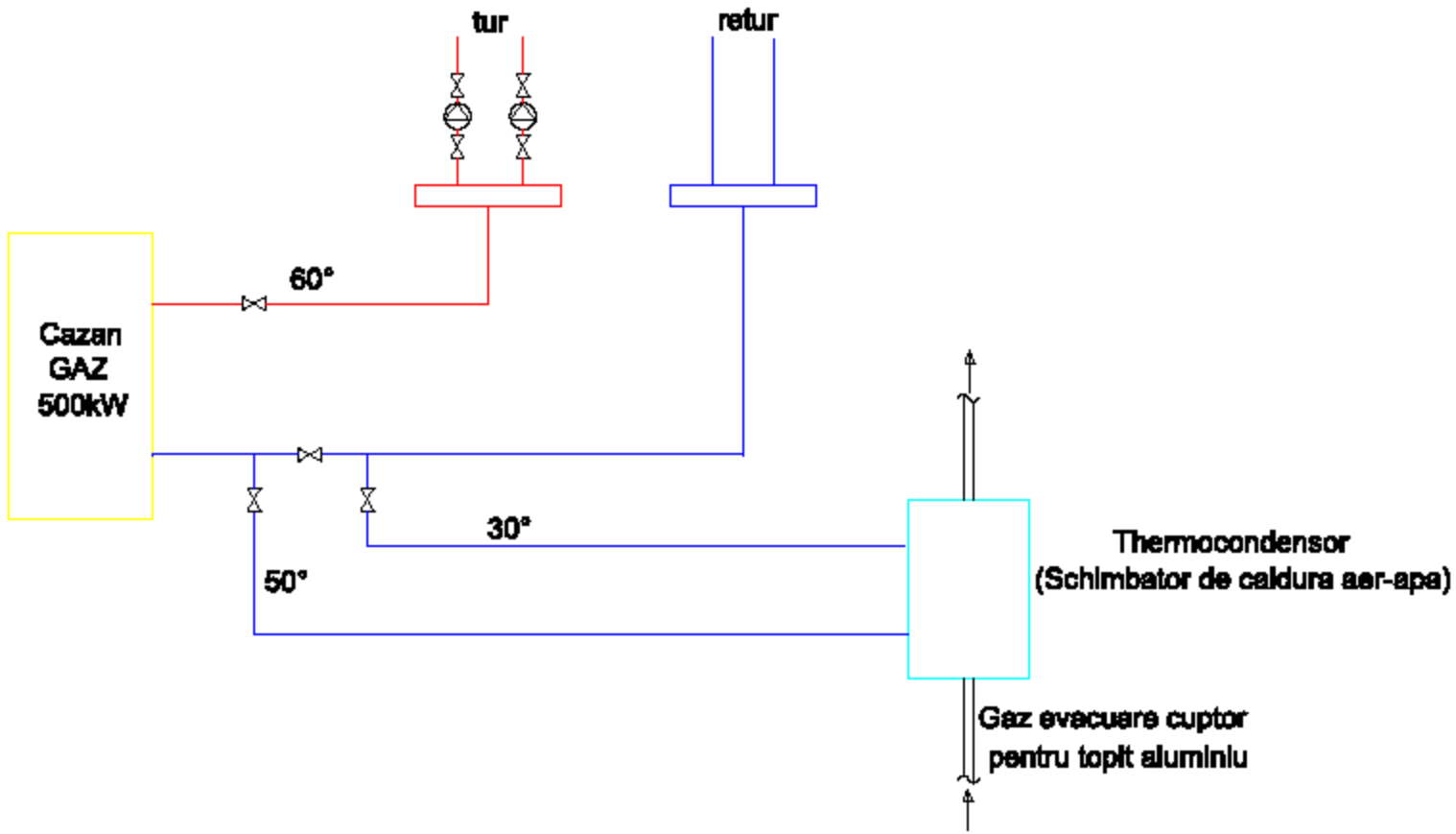
tur
retur
60°
Cazan
GAZ
500kW
30°
50°
Thermocondensor
(Schimbator de caldura aer-apa)
Gaz evacuare cuptor
pentru topit aluminiu

ThermoCondensor AF

Type 1500

- Nominal output boiler kW 2000
- Burner input max. kW 485 2150
- Nominal output ThermoCondensor AF 3 at 35/30 °C kW 280,at 65/60 °C kW 120
- Operating pressure max. / test pressure bar 6/9,6
- Max. permitted operating temperature °C 90
- Max. flue gas inlet temperature °C 300
- Max. flue gas outlet temperature °C 120
- Boiler water capacity Litre 320
- Weight without casing kg 810
- Weight incl. casing kg 850
- Insulation thickness mm 80
- Flue gas resistance at nominal output (± 20 %) mbar 2,9
- Flow resistance ThermoCondensor AF 1 z-value 0,03
- Max. condensate quantity 3 l/h 180,5
- pH value of the condensate 5,0

Value for flue calculation at maximum nominal load 2

- Max. flue gas mass flow 3 at 65/60 °C kg/h 3400
- Max. flue gas temperature 3 at 65/60 °C °C 68
- Max. flue gas mass flow 3 at 35/30 °C kg/h 3400
- Max. flue gas temperature 3 at 35/30 °C °C 46

ThermoCondensor AF

Hoval

Date tehnice despre sistemul existent

Puterea cazanului	kW	2000
Pierderile in standby	kW	2
Temperatura minima pentru cazan	°C	80
Valoarea anuala a orelor de functionare	h	7000
Valoarea masurat pentru CO2 (8% - 10.5 %)	%	10
Puterea calorifica pentru gazul natural	kWh/m³	10.8
Temperatura turului la sarcina nominala	°C	110
Temeratura returului la sarcina nominala	°C	70
Debitul de apa returnat prin TCAF	%	100
Debitul de apa incalzita	m³/h	42.86
Consumul anual de gaz natural pentru sistemul existent	m³	1.453.785
Pierderea in gazele arse (pentru cazanul existent)	%	10,83

Datele de referinta pentru proiectarea - alegerea ThermoCondensor AF:

Arzatorul trebuie sa invinga rezistenta gazelor arse de la cazan, TCAF si a conexiunii dintre cazan si TCAF pentru gazele arse.

Rezistenta gazelor arse la puterea nominala (± 20 %)

ThermoCondensor AF (450)	1.8 mbar
ThermoCondensor AF (650)	1.9 mbar
ThermoCondensor AF (950)	1.8 mbar
ThermoCondensor AF (1500)	2.0 mbar
ThermoCondensor AF (2000)	4.0 mbar
ThermoCondensor AF (2600)	3.0 mbar
ThermoCondensor AF (3200)	5.0 mbar

Datorita temepraturi scazute a gazelor arse sitemul trebuie sa fie etans, rezistent la umiditate, etans la suprapresiune si sa fie realizat dintr-un material rezistent la coroziune. Materiale recomandate: Otel de foarte buna calitate, plastic

ThermoCondensor AF

Pret gaz natural	€/m³	0.40
	€/kWh	0.04

ThermoCondensor AF 2000

TCAF

(Puterea schimbatorului de caldura (kW

240

Temeperatura de intrare a gazelor arse (°C

250

Temperatura de iesire din schimbatorul de caldura (°C

34,8

Media anuala a temperaturi returulu (°C

30

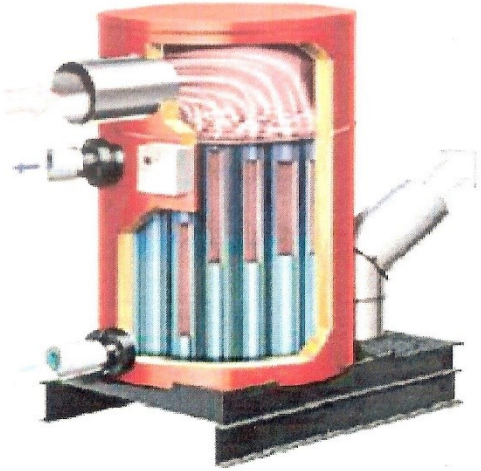

Temperatura de iesire a gazelor arse (°C

54

Va rugam sa considerati ca pentru cazan este necesara o crestere a temperaturi returului

Economiile anuale inregistrate prin utilizare ThermoCondensor AF

Economiile anuale de energie (%)	**12,4**
Economiile anuale de gaz natural (m³)	**179.715**
Economiile anuale pentru costurile de operare (€)	**71.886**
Economiile anuale de CO2 (kg)	**388.184**

Conclusion

The project is being implemented, currently by installed:

- Piping (flue oven-recovery, bypass, exhaust)
- Recuperator
- Circuit Retriever departure from power plants
- There are several issues to reduce flue gas temperature (from about 350 gr under 300 gr) in order to protect the recuperator; will mount a flap with cooler air mixture;
- It monitors the operating parameters